EURORACK

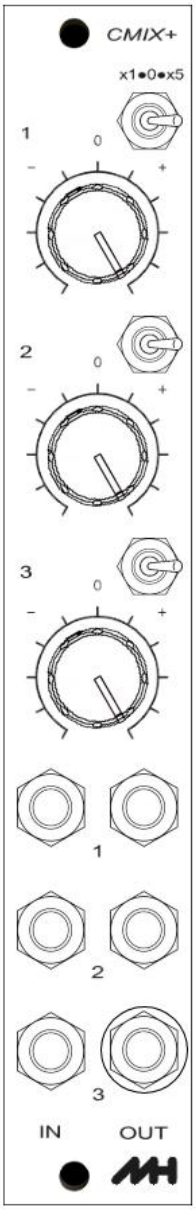

CMIX+ 2.0

User Manual

CMIX+ 3-channel CV & audio mixer / switcher / booster

Thank you for purchasing this MH Eurorack CMIX+ module.

As with any Eurorack module please power off your rack before connecting.

Basic Structure

Each CMIX+ channel comprises an attenuverter and a three way gain / mute switch. The channels can be combined as a 3 channel CV / audio mixer with the output on channels 3, or they can be used separately. Plugging a jack into the output of channels 1 or 2 will remove that channel from the mix and it then becomes a single channel attenuverter.

Moving the channel switch to the left on any channel gives unity (x1) gain, the right position give x5 gain and the centre position mutes the channel whether it is being used as a separate attenuverter or as part of the mix.

The x5 gain boost is enough to bring most line level audio signals up to the level expected by Eurorack modules.

If there is nothing plugged into a channel input, a DC voltage is normalled to it. The level of this voltage can be changed by adjusting the RV4 trimer on the back of the module. The range of this voltage is 0v to approximately +1.5v. Turning the trimmer to 0v (anticlockwise) effectively switches off the normalisation. This might be useful if the CMIX+ is being used predominantly for audio mixing (prevents unwanted offsets when an input jack is removed)

Patch Examples

The following pages show a few examples of how the CMIX+ can be used. It’s not an exhaustive list as there will be many other applications for this module! Where the normalled voltage (unconnected input jack) is used in these examples, an adjustment of RV4 to give approximately 1 volt is assumed.

1. **Offset attenuverter**

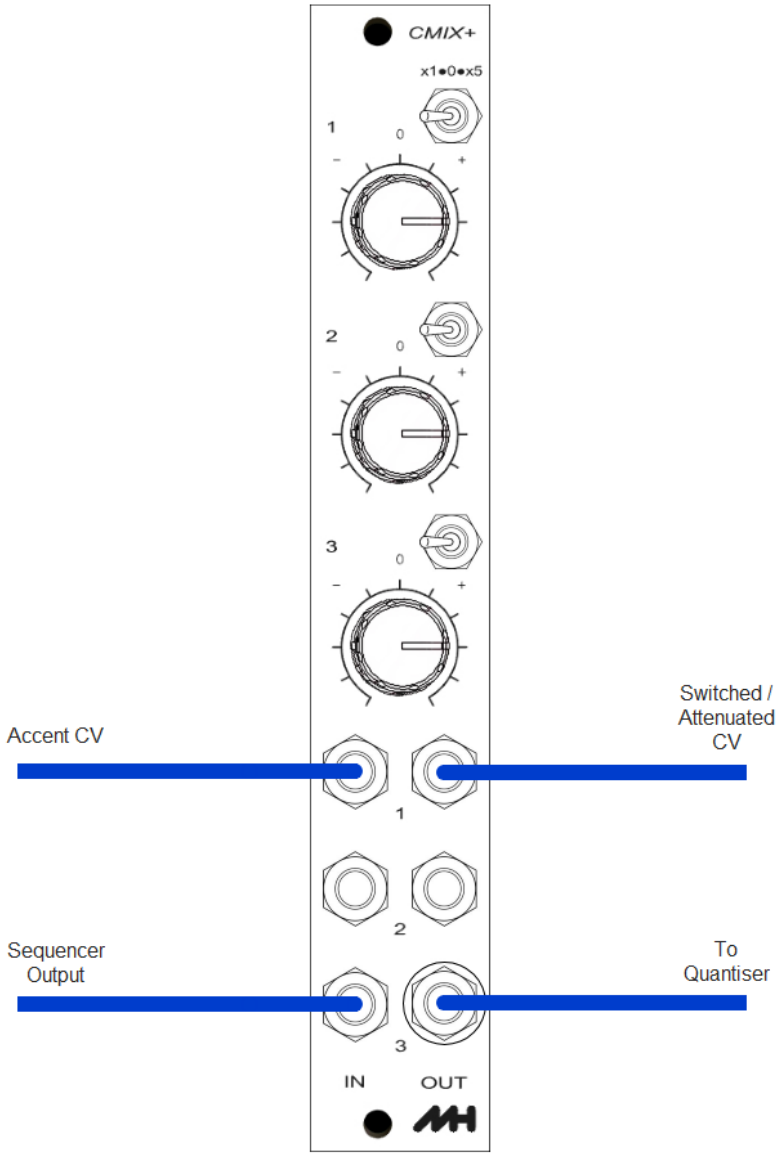

Here a sequencer output is being scaled by channel 3. Channel 2 acts as an offset for this, shifting the pitch of the sequence up or down using the normalled DC voltage. Channel 1 can be used as a separate attenuveter. In this example we are taking an accent CV (second sequencer channel) and using channel 1 to adjust the level of this. The channel 1 switch can be used to switch off or boost the accent CV.

2. Separate attenuverter / Boost channels

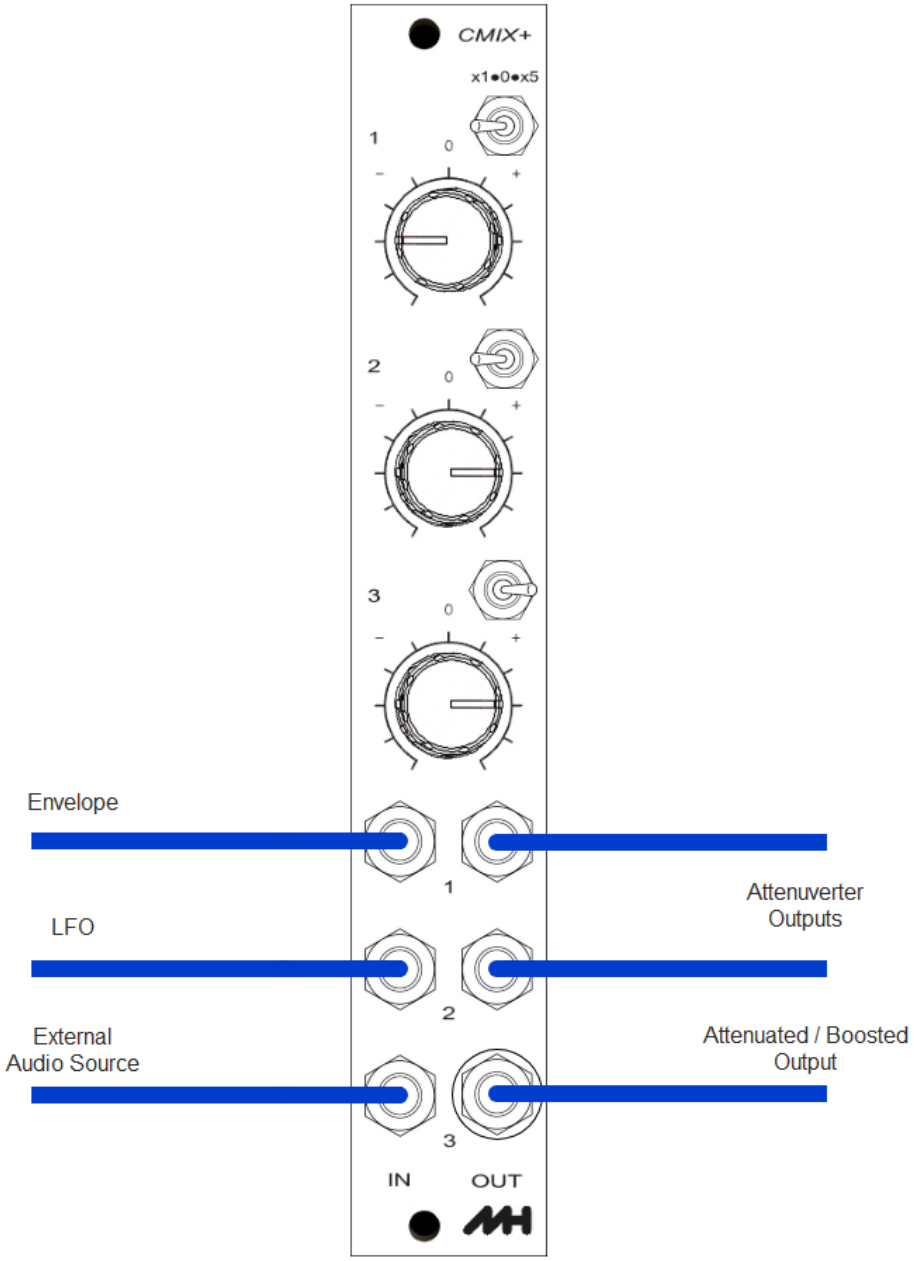

Here we show the CMIX+ being used for three separate signal paths. Note that channel 3 switch is in the 'x5' position, so, for example, an external audio line signal can be boosted to Eurorack level.

Any of the three channels can be separately muted using the channel switch.

3. **Trigger pattern switching**

   Level controls should be turned fully clockwise

   Use x1or 0 switch positions

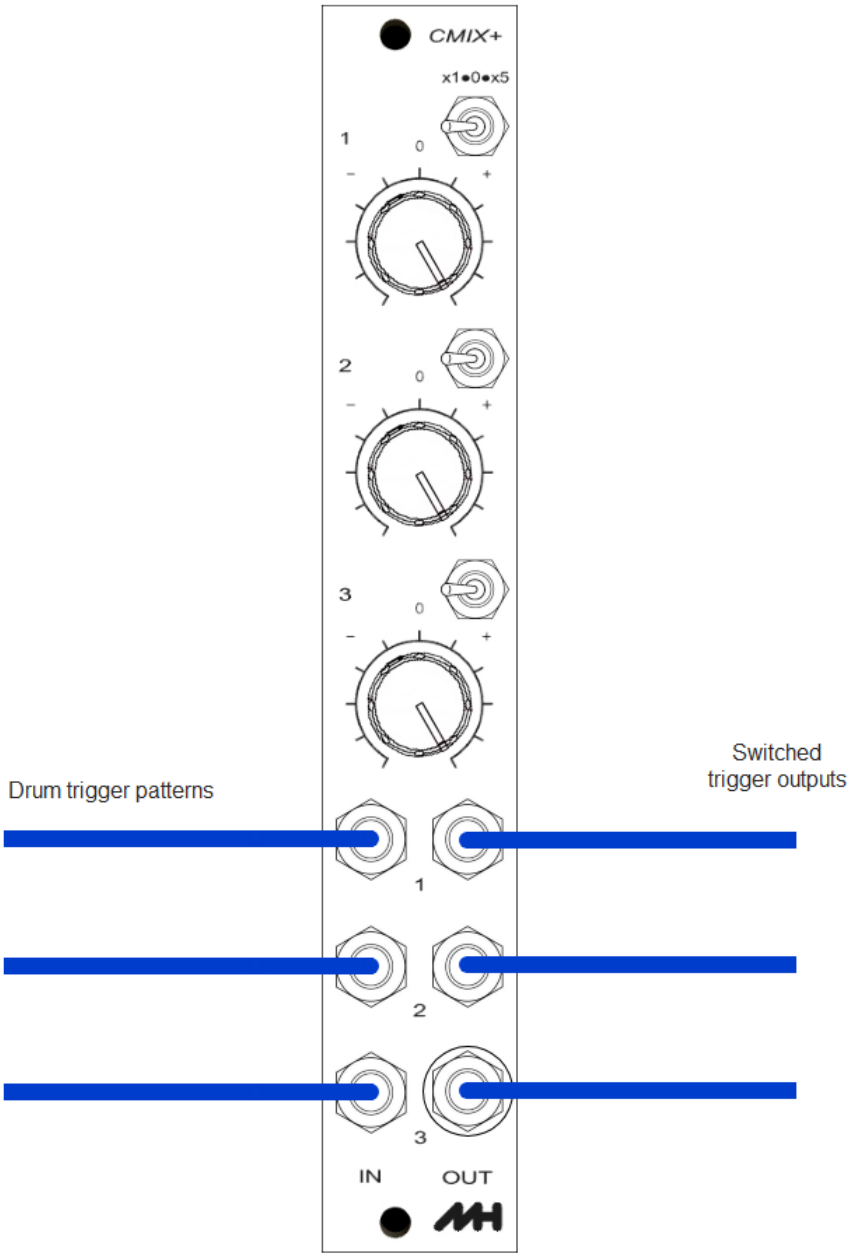

Three different trigger patterns can be switched on or muted as required.

4. Trigger pattern combining

Level controls should be turned fully clockwise

Use x1 or 0 switch positions

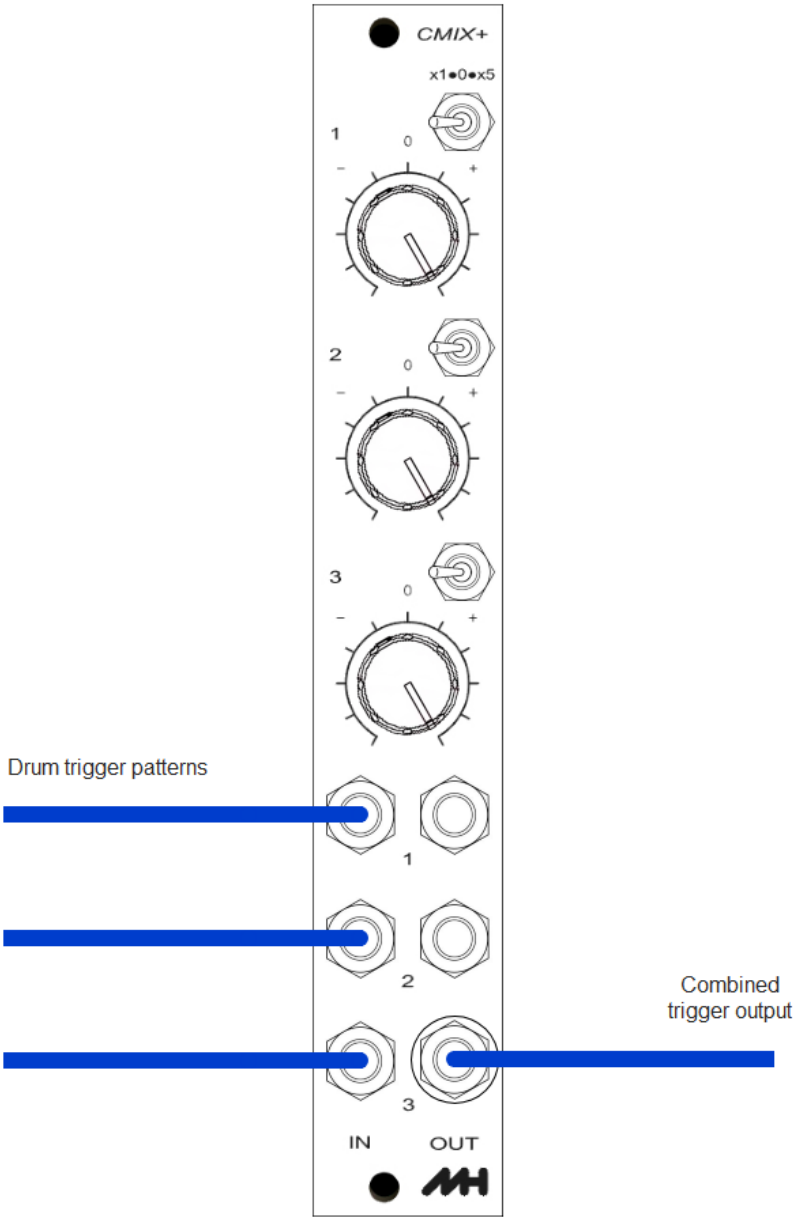

Three different trigger sources can be combined to create polyrhythmic patterns.

5. Mixed use example

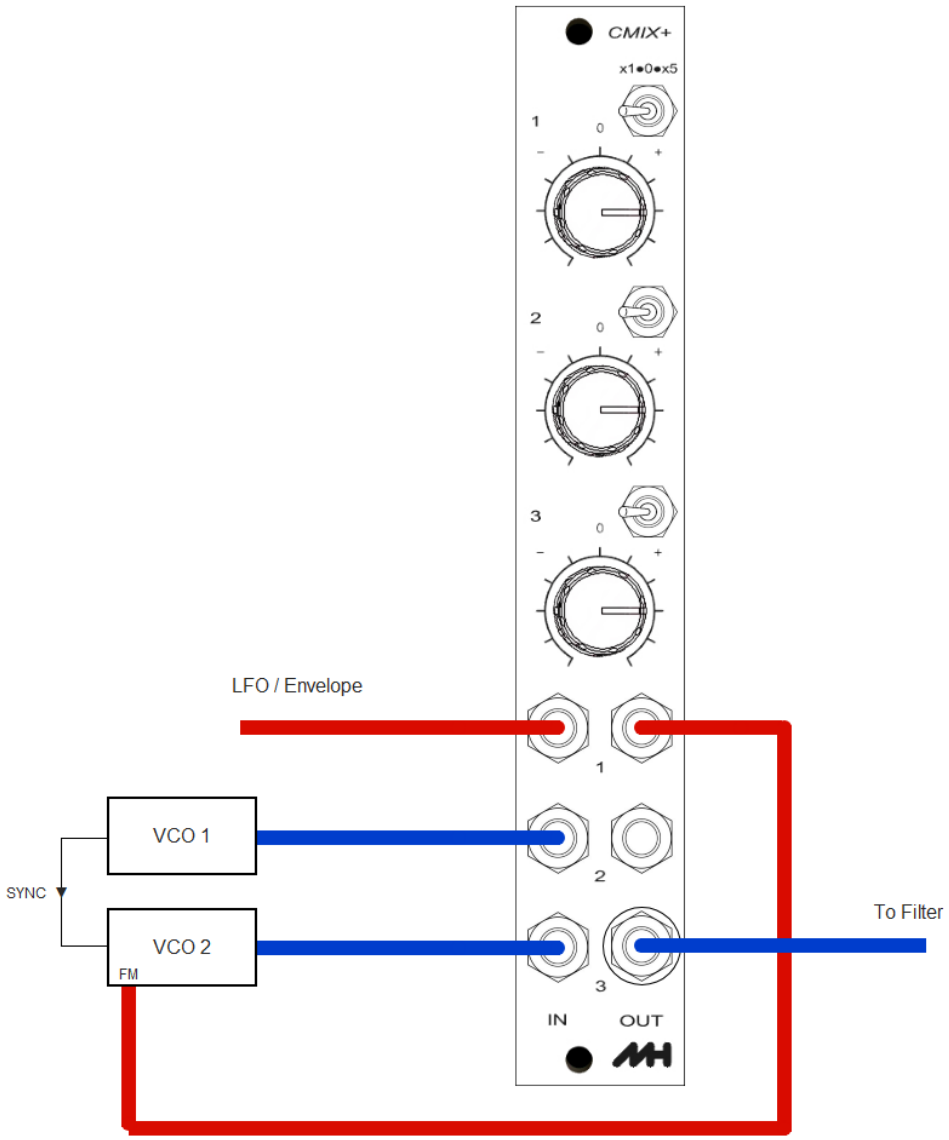

Here is just one example of combining two different functions with the CMIX+. Channels 2 & 3 act as a VCO mixer and channel 1 is an attenuator for VCO 2 FM.

The channel switches can be quite useful when switching oscillator sync on and off. (When Osc sync is off, switch off FM modulation and switch VCO 1 back into the mix)

6. Audio Mixer

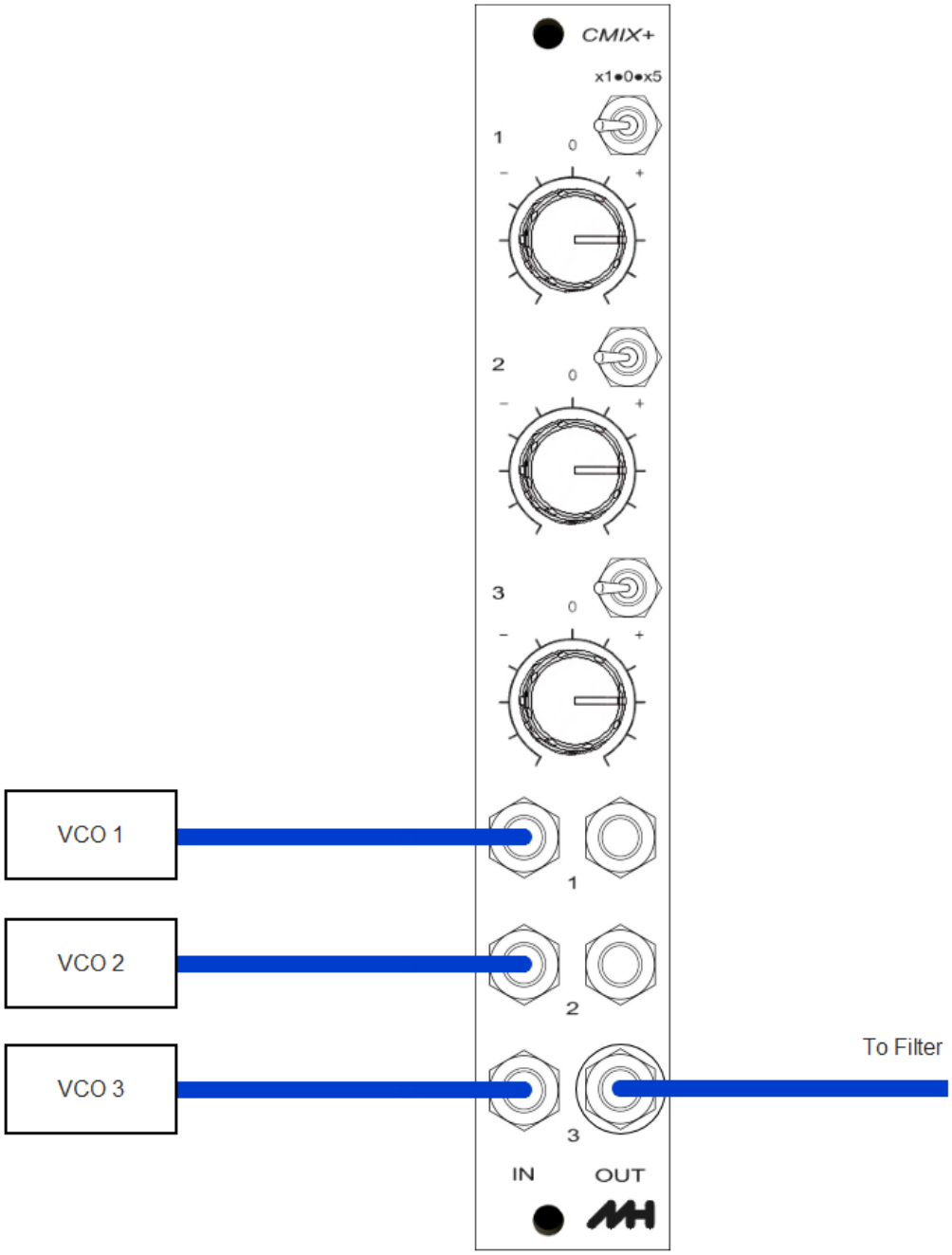

A straightforward VCO mixer with mute switches for each channel (very useful for tuning). The x5 gain on each channel can be used to overdrive the filter.

7. FX Pedal Send / Return

Channel 3 needs to be set to x5. Channel 2 mute.

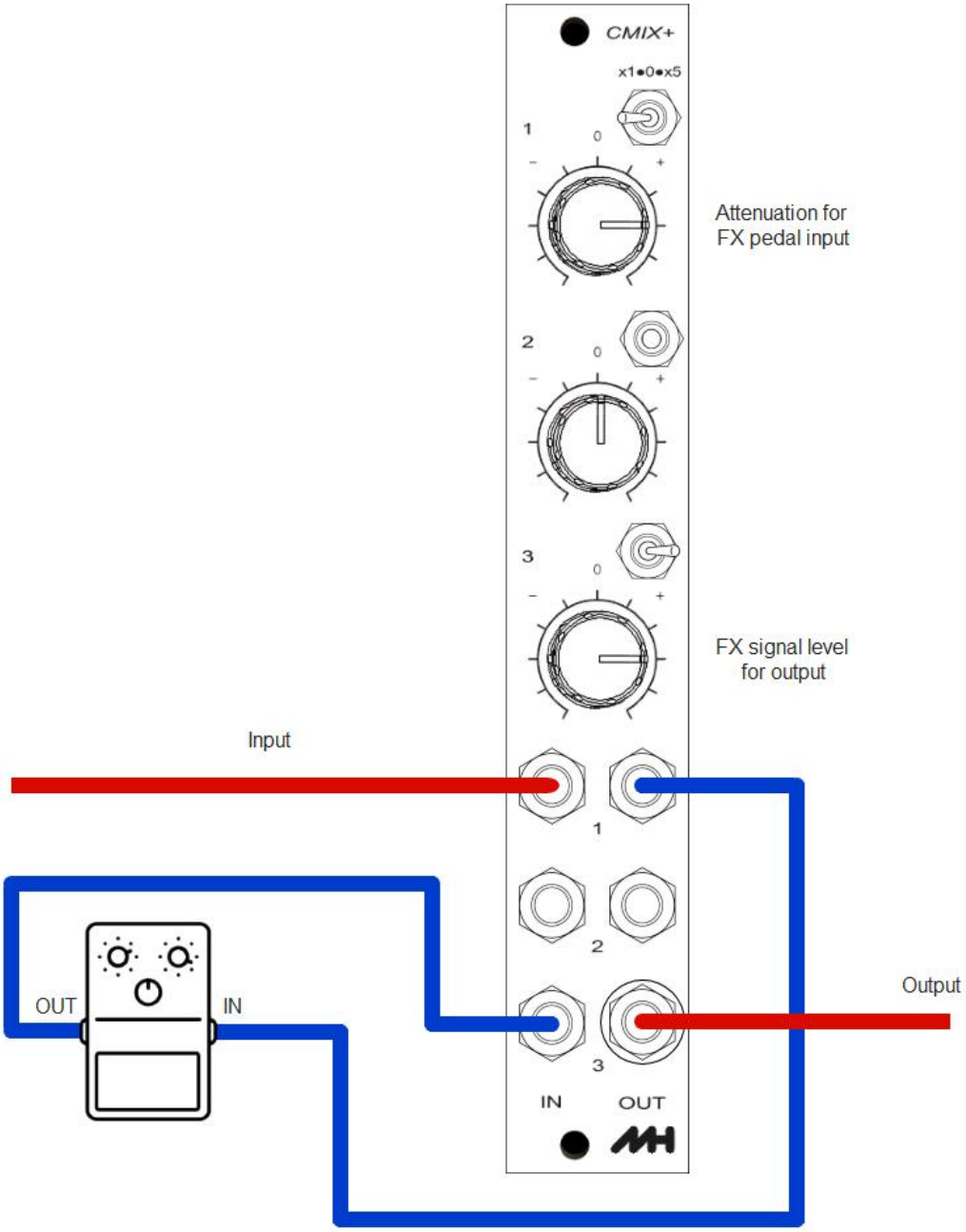

CMIX+ can act as a send / return interface for an FX pedal or other external audio processor.

In this example, channel 1 attenuates the signal going to the pedal. Channel 3, with the x5 gain boost, is the FX return path.

8. Dual FX Pedal Send / Return

Channels 2 & 3 set to x5 gain

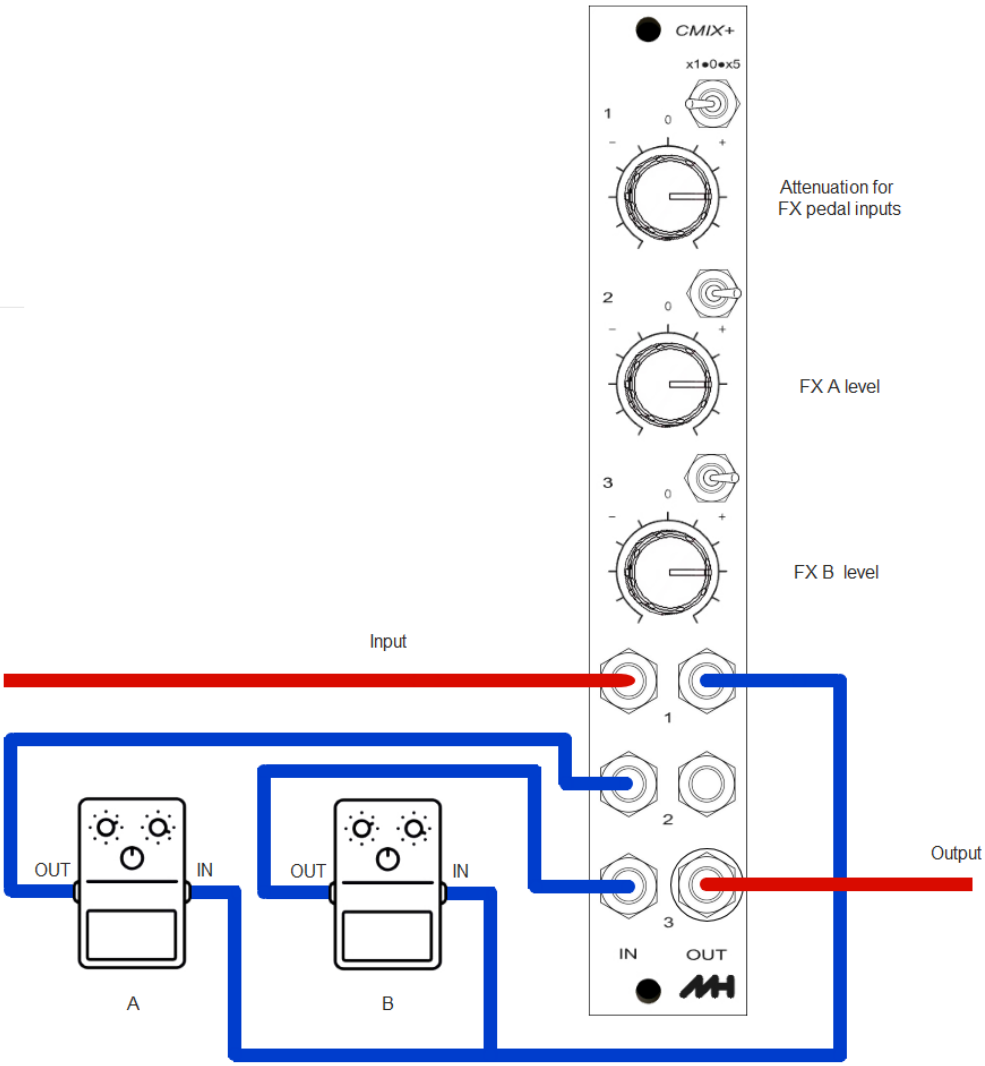

Here again we have channel 1 attenuating the signal going to the pedals. The signal is then split to go to both pedal inputs. The FX pedal return outputs are boosted and mixed together by channels 2 & 3 (x5 gain selected on both these channels)

9. Manual Gates

All channels set to x5 gain, knobs fully clockwise

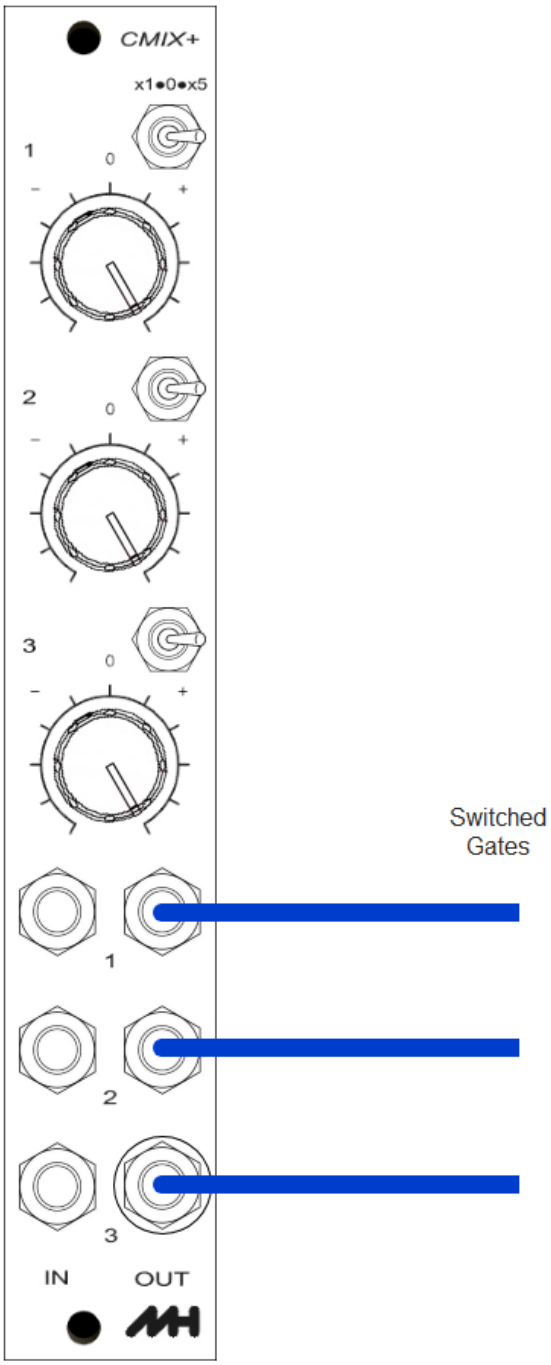

In this example the switches are being used to switch +5 volts to the outputs. You can use this configuration to manually switch gate signals on or off. (for instance, for a sequencer run control or a drone envelope)

10. Switched voltage source

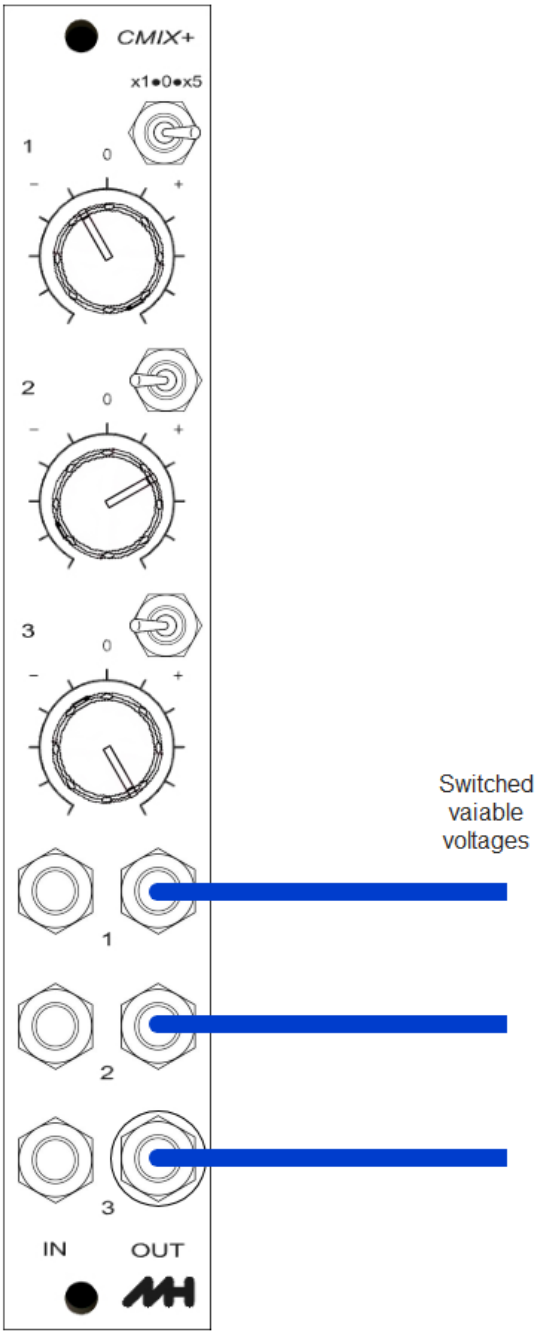

With a similar set up to the previous patch, here we are using the CMIX+ aa a source of switchable voltages

11. Course / Fine voltage adjustment

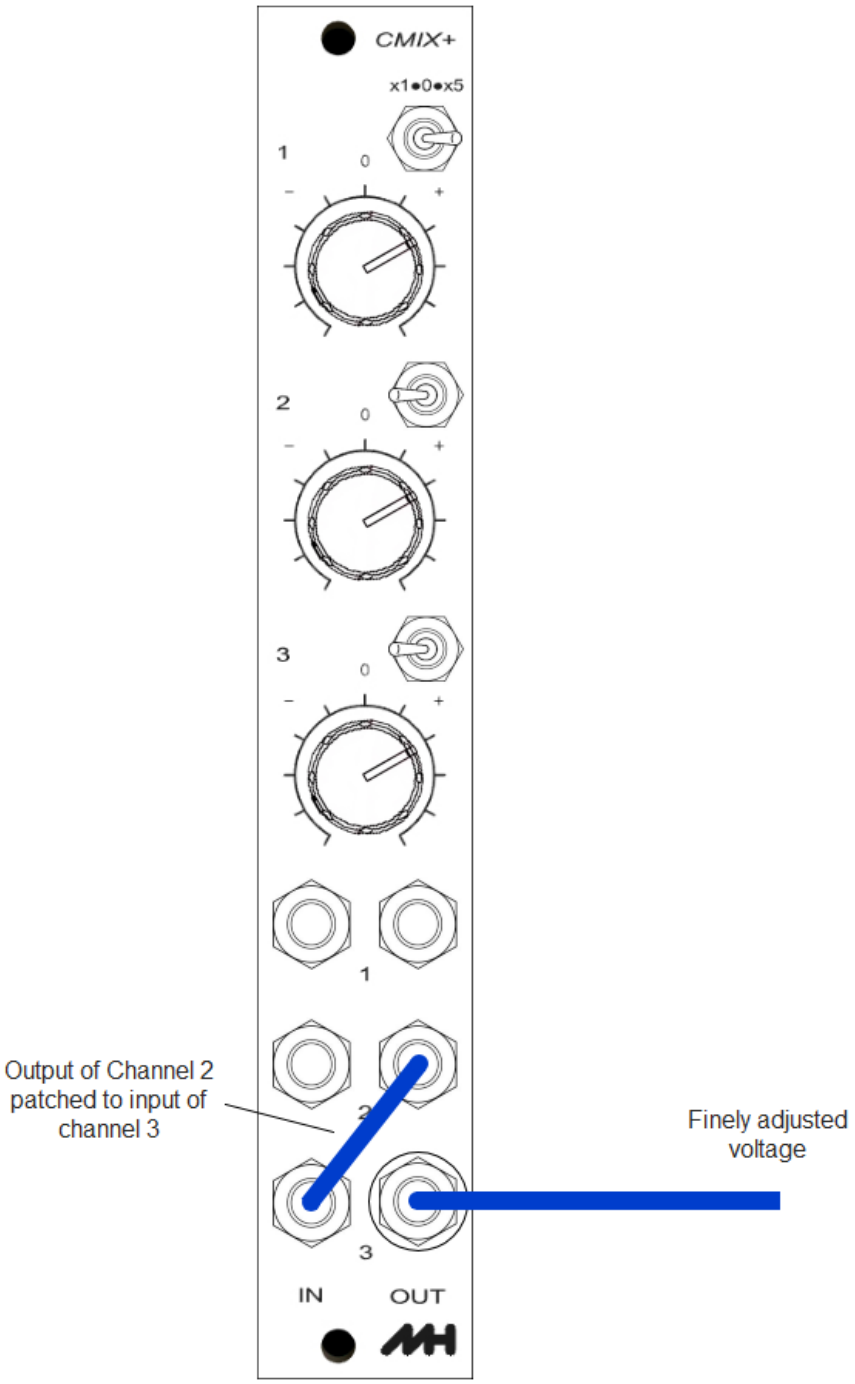

Sometimes a voltage needs precise adjustment. Here channel 1 provides a ‘course’ voltage setting which is mixed with the output of channel 3. Channel 2 is excluded from the mix as there is a jack plugged into its output, but it sets the range of voltage passed to channel 3. Setting channel 2 to a small value means channel 3 can be used as a very fine control.

Support

Any problems? Feedback? Please use the contact form on the MH Eurorack website

Instagram: @mheurorack